Smart EduBuddy

System Workflow & Circuit Diagram

Complete Technical Documentation

Contents:

1. System Workflow: How It Works
2. Circuit Diagram (NodeMCU / ESP32)
3. Power Supply
4. Software Architecture
5. MQTT Communication Protocol
6. Testing & Troubleshooting
7. Safety Guidelines

1. System Workflow: How It Works

Step 1: Teacher Sets Question

1. Teacher opens **"Teacher Panel"** on their laptop.
2. Teacher types a question (e.g., "What color is the sky?")
3. Teacher selects the **Correct Answer** from the dropdown (e.g., "Color Blue").
4. Teacher clicks **"Send Question"**.
5. **Result:**
   - The question appears on the **Dashboard Screen** (Projector/TV).
   - The system silently stores the "Correct Answer ID" (e.g., `02BLUE`).

Step 2: Student Responds

6. Student looks at the question on the big screen.
7. Student finds the **physical card** that matches their answer (e.g., The Blue Card).
8. Student taps the card on the **Smart EduBuddy Device** (RFID Reader).

Step 3: Device Processing

9. **RFID Reader** detects the card.
10. **NodeMCU/ESP32** reads the unique ID from the card (e.g., `UID: E3 4A B2`).
11. **Code** converts that detected ID into a readable Answer ID (e.g., `02BLUE`).
12. Device sends this message: `"02BLUE"` to the **MQTT Cloud**.

Step 4: System Verification

13. **Web Dashboard** receives the message `"02BLUE"`.
14. It checks: **Is `02BLUE` == `Correct Answer ID`?**
    - **YES (Correct):**
      - Screen flashes **GREEN**.
      - Audio plays: "Correct! Great Job!"
      - **+1 Score** is added to the "Correct" scoreboard.
    - **NO (Wrong):**
      - Screen flashes **RED**.
      - Audio plays: "Oops! Try Again!"
      - **+1 Score** is added to the "Wrong" scoreboard.

2. Circuit Diagram (NodeMCU / ESP32)

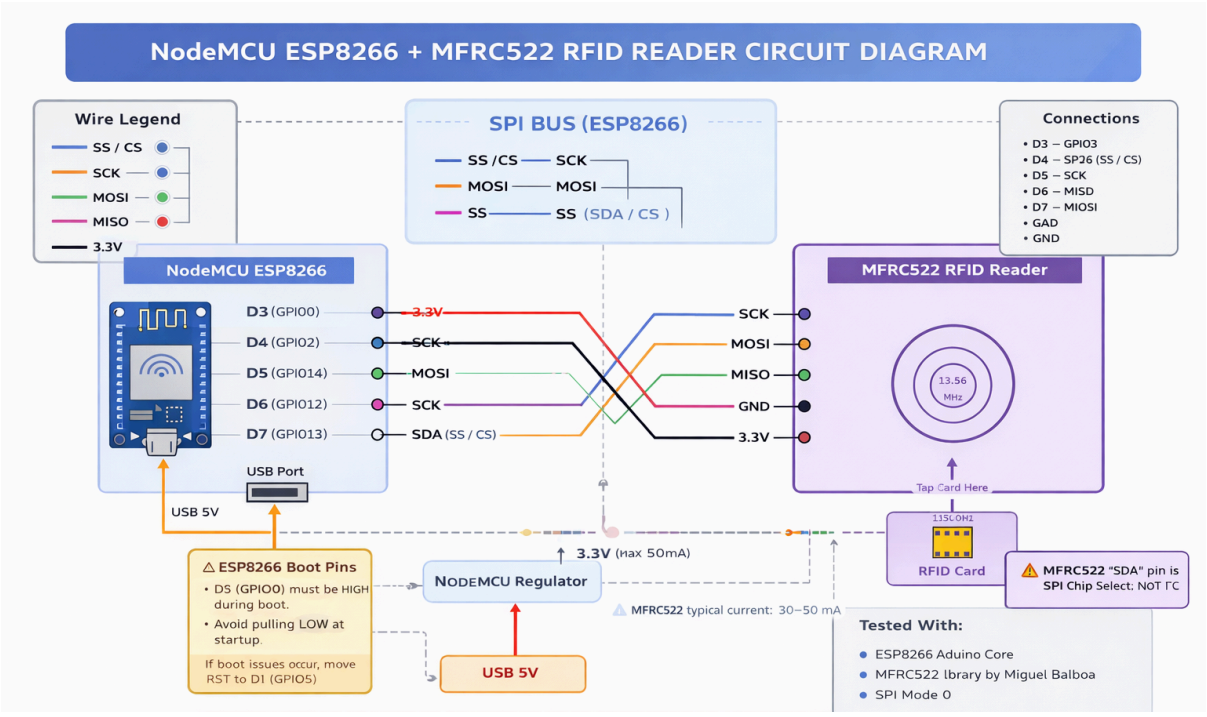

Figure 1: Schematic Diagram

Components Needed:

15. **Microcontroller:** NodeMCU (ESP8266) **OR** ESP32 Dev Module
16. **RFID Reader:** MFRC522 (RC522)
17. **LED (Optional):** Built-in LED is used for status.

Wiring Connections:

A. RFID Reader (RC522) to Microcontroller

RC522 Pin	NodeMCU (ESP8266)	ESP32
SDA (SS)	D4 (GPIO 2)	GPIO 5
SCK	D5 (GPIO 14)	GPIO 18
MOSI	D7 (GPIO 13)	GPIO 23
MISO	D6 (GPIO 12)	GPIO 19
IRQ	Not Connected	Not Connected
GND	GND	GND
RST	D3 (GPIO 0)	GPIO 22
3.3V	3.3V (3V3)	3.3V (3V3)

3. Power Supply

Connect the **NodeMCU / ESP32** to your laptop or a USB charger using a **Micro-USB cable**.

Power Requirements:

- **Input Voltage:** 5V DC (via USB)
- **Current Draw:** ~200mA (typical), ~500mA (max)
- **Power Consumption:** ~1W average
- **Power Source Options:** USB wall adapter, laptop USB port, power bank

Recommended Power Sources:

✓ Phone charger (5V, 1A minimum)
✓ Laptop USB port (for testing)
✓ Power bank (for portable operation)

4. Software Architecture

System Components:

NodeMCU Firmware

- **Language:** Arduino C++
- **Libraries:** MFRC522, PubSubClient, ESP8266WiFi
- **Functions:** WiFi connection, RFID reading, MQTT publishing

Web Dashboard

- **Technology:** HTML5, CSS3, JavaScript
- **MQTT Library:** MQTT.js (WebSocket)
- **Functions:** Display questions, show feedback, track scores

Teacher Control Panel

- **Interface:** Web-based (responsive design)
- **Features:** Question creation, preset options, game controls

5. MQTT Communication Protocol

The system uses MQTT (Message Queuing Telemetry Transport) for real-time communication between all components.

MQTT Topics:

Topic	Purpose
`edubuddy/question`	Teacher sends questions to dashboard
`edubuddy/answer`	NodeMCU sends student answers
`edubuddy/status`	Device online/offline notifications
`edubuddy/control`	System control commands (reset, clear)

Message Format Example:

Question Message: `QUESTION|02BLUE|Find the Color Blue`

Answer Message: `A1B2C3D4`

6. Testing & Troubleshooting

Initial Testing Steps:

18. **Power On Test:** Check if NodeMCU power LED lights up
19. **WiFi Connection:** Verify connection via Serial Monitor
20. **RFID Test:** Place card on reader, check Serial Monitor for UID
21. **MQTT Test:** Verify "Connected" status on dashboard

Common Issues & Solutions:

Issue 1: RFID Not Reading Cards

- ✓ Verify 3.3V power connection (NOT 5V!)
- ✓ Check all SPI wire connections
- ✓ Try different RFID cards

Issue 2: WiFi Won't Connect

- ✓ Double-check WiFi SSID and password
- ✓ Ensure using 2.4GHz network (ESP8266 doesn't support 5GHz)
- ✓ Move NodeMCU closer to router

Issue 3: Dashboard Shows Offline

- ✓ Refresh browser page
- ✓ Check internet connection
- ✓ Verify MQTT broker is accessible

7. Safety Guidelines

Electrical Safety:

- Always use more the 5v power
- Avoid touching components while powered on
- Use insulated enclosure for classroom use

Physical Safety:

- No exposed sharp components
- Secure all wire connections
- Keep device away from water and liquids
- Supervise children during use

Data Safety:

- No personal student data is stored
- System only tracks anonymous scores
- All communication is on local network or encrypted MQTT